NEW POLARADIOMETRIC METHOD FOR NON-CONTACT TEMPERATURE MEASUREMENT

A. Abtahi and M. Barmatz
Jet Propulsion Laboratory, California Institute of Technology, Pasadena,CA91109
(818) 354-3088

ABSTRACT

The Polaradiometer is a new non-contact temperature measurement system that eliminates the need for knowledge of the surface characteristics of the sample. This instrument is insensitive. to surface emissivity and roughness effects and thus accurate true temperature measurements can be performed on materials ranging from metals to ceramics even for surface properties that change with time. This instrument should be of value in ground-based as well as space applications where accurate non-contact true temperature measurements arc required. The principle of operation of the Polaradiometer is based on the fact that the effect of emissivity on the process of emission is complementary to its effect on the process of reflection, Specifically, radiation emitted at an angle from a surfs is polarized, meaning the emissivities corresponding to the two primary directions of polarization are different from each other. The same holds true for radiation reflected from the surface, except that because the reflectivity is the determining factor here, the effect of the reflection on the polarization of the reflected light is exactly opposite to that on the emitted light. The Polaradiometer essentially works by combining the emitted radiation with the reflected radiation and measuring the polarization state of the combined radiation. The intensity of the source of the reflected light is adjusted until the combined light is unpolarized. It can be shown that when that polarization null is achieved the intensity of the source of the reflected light represents the true temperature of the sample regardless of its surface characteristics, i.e., the blackbody temperature of the source is equal to the true temperature of the sample. The radiation intensity of the source can easily be calibrated against a standard to accurately determine the true temperature of the sample. The basic principle of operation of the Polaradiometer has previously been demonstrated. The purpose of the present work is to perform a more detailed proof of concept. In this talk, we will present temperature measurements on a set of diffuse and specular surfaces. The Polaradiometer measurements will be compared to a thermocouple mounted on the sample holder and the accuracy and repeatability of the measurements will be discussed.

INTRODUCTION

The Polaradiometer is a simple pyrometry device for measuring true temperature. The effects of emissivity as well as diffusivity of the sample are eliminated from the measurements by the inherent characteristics of the design rather then by external post processing of brightness temperature data (Murray 1967). Other systems measure true temperature by determining the emissivity or emissivity ratio of the sample and using the measured value to correct the reading from a standard pyrometer (Lee 1988), (Hale 1989). This approach has two weaknesses: Systems are extremely complex since emissivity measurements involve. cumbersome calculations. The correction algorithms used to correct the pyrometer output for emissivity effects add to the computational requirements. The second drawback is that standard pyrometric measurements constitute a simple radiation intensity measurement. These can suffer from a lack of accuracy. The polaradiometer eliminates the need for any calculations since no emissivity measurements or corrections are necessary. Since the polaradiometer uses a nulling approach rather than a simple intensity measurement it has the potential for greater accuracy.

GENERAL DESCRIPTION OF THE POLARADIOMETER

The polaradiometer is based on the fact that the polarization of radiation emitted from a surface due to thermal emissions and the polarization of radiation reflected from the surface are complimentary. Thus when the polarization of a combination of emitted and reflected light is random the intensity of the reflected beam before reflection represents the brightness temperature of the surface. Figure 1 is sketch of the essential elements of the polaradiometer. The instrument consists of 2 main parts: 1.) a light source emitting randomly polarized light (Lamp) and 2.) a polarization state analyzer (PSA). The light from the source is reflect.cd from the surface of the sample into

the polarization state analyzer along with the thermal emissions from the sample. The analyzer axis must be at an angle to the surface of the sample however the value of that angle is not critical and can be varied without re-calibration or changes to the instrument. This greatly simplifies operation of the system since no *cumbersome* alignment is needed.

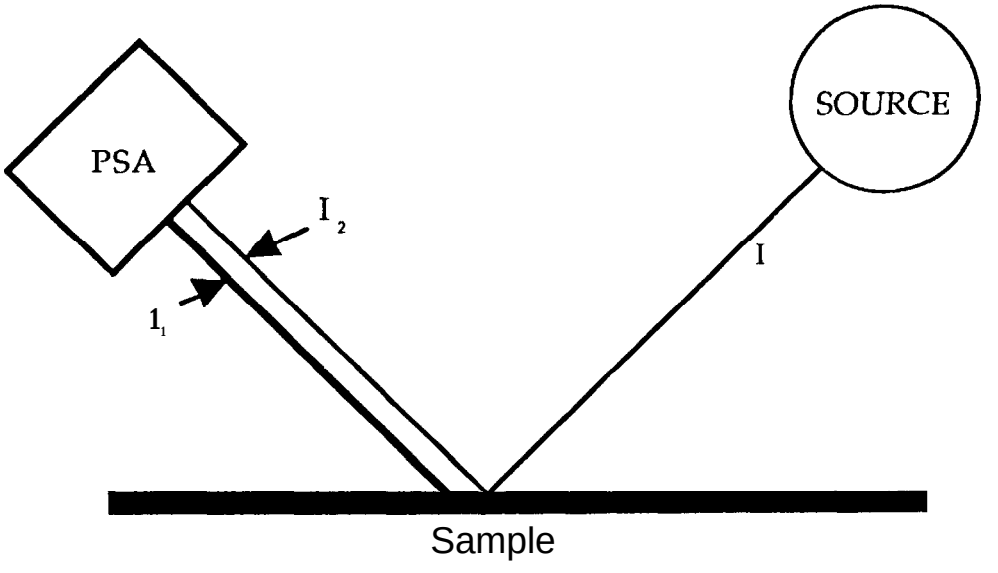

Figure 1 : Layout Sketch of the Polaradiometer

Due to the reflection, the radiation entering the PSA from the source is partially polarized. The radiation emanating from the sample is also partially polarized, since it is emitted at the same angle. The essence of the function of the polaradiometer is, to utilize the fact that the effect of reflection and angular emission on the polarization state are complementary, to eliminate the effects of emissivity. If T is the thermodynamic temperature of the sample and I_1 is the intensity of the radiation from the sample. entering the PSA Planck's law states :

$$I_{1,\lambda} = \& \; I_{b,\lambda} = \varepsilon \frac{2.hc_0^2}{\lambda^5\left[\exp\left(\frac{hc_0}{\lambda kT}\right) - 1\right]}$$

where 1 is the wavelength of the radiation and I_b is the corresponding blackbody radiation intensity. If wc decompose the polarization of the light into two directions we can write:

$$I_{1p} = \frac{I_b\,\varepsilon_p}{2} \quad \text{and} \quad I_{1s} = \frac{I_b\,\varepsilon_s}{2}$$

Also for the radiation emanating from the source and being reflected into the PSA:

$$I_{2s} = \frac{I_{LAMP}\,\rho_s}{2} \quad \text{and} \quad I_{2p} = \frac{I_{LAMP}\,\rho_p}{2}$$

where the subscripts and p refer to polarization components perpendicular and parallel to the plane of incidence. r and e stand for reflectivity and emissivit y respectively. The radiation intensities I_1 and I_2 both are partiall y polarized but when combined the polarization components can balance in such a way that the radiation received by the PSA is unpolarized. ,The condition for this is:

$$I_{1p} + I_{2p} = I_{1s} + I_{2s}$$

substituting and rearranging :

$$I_b\varepsilon_p + I_{LAMP}\rho_p = I_b\varepsilon_s + I_{LAMP}\rho_s$$

$$I_b(\varepsilon_p - \varepsilon_s) = I_{LAMP}(\rho_s - \rho_p)$$

since: $\rho_s = 1 - \varepsilon_s$; $\rho_p = 1 - \varepsilon_p$

$$\rho_s - \rho_p = \varepsilon_p - \varepsilon_s$$

$$I_b = I_{LAMP}$$

Using Planck's law one can now write a relationship between I_{LAMP} and T as follows:

$$I_{LAMP} = I_b = \frac{2hc_o^2}{\lambda^5\left[\exp\left(\frac{hc_o}{\lambda kT}\right) - 1\right]}$$

This relation holds for any surface emissivity. The instrument works by measuring or determining I_{LAMP} . From that T can be found quite easily:

$$T = \frac{hc_o}{\lambda k \ln\left[\frac{2hc_o^2}{I_{LAMP}\lambda^5} + 1\right]}$$

There is no need to determine the emissivity of the sample and correct measured brightness temperatures.

PROTOTYPE DEVELOPMENT

After the discovery of the basic principle of operation for this system a prototype development effort was begun at JPL. This effort has resulted in the construction of a working model and has demonstrated the feasibility of the polaradiometer. The prototype operates at a wavelength of 1064 nm. This wavelength was chosen because it is the longest at which off the shelf optical components are available and because silicon detectors are sensitive to radiation at this wavelength. In general it is advantageous to chose longer wavelengths since thermal emissions from samples at all but extremely high temperatures are most intense at the longer wavelengths. As A light source we chose a tungsten halogen lamp. This source offers sufficiently intense radiation at the 1064 nm wavelength, low cost and ease of operation.

The PSA was built as a solid state detector. The light entering the unit is imaged onto a pinhole to spatially filter the input. In front of the pinhole we included a interference filter for 1064 nm light, The emerging light from the pinhole is collimated and the resulting beam is polarized and split in a polarizing beamsplitter. The two polarization components impinge on two silicon detectors. When the output from the two silicon detectors is equal we know that the two components of polarization arc balanced. Figure 2 is sketch of the PSA unit constructed at JPL. The actual PSA measures 3" in length including the imaging optics however did not chow to include the electronics in this box at this time for easier access to the optical components. There is ample space to include all electronics in a unit of comparable size.

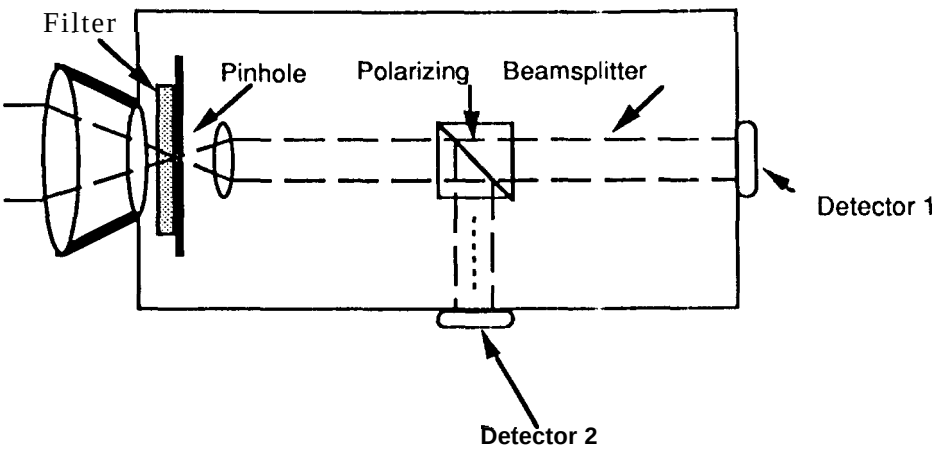

Figure 2: PSA Prototype

The output from the two detectors after appropriate amplification is compared to obtain the polarization state of the light. Since this system does not require a measurement of the actual polarization state the magnitude of the difference between the detector outputs is not important. The instrument merely has to achieve a state where the outputs are equal. When this state is reached the output from the lamp represents the temperature measurement. The complete electronics for the Polaradiometer must adjust the intensity of the lamp until the output from the detectors is equal, At this point the lamp intensity (the electrical current through the filament of the lamp) must be converted to a temperature reading. A simple system for this purpose is shown in Figure 3.

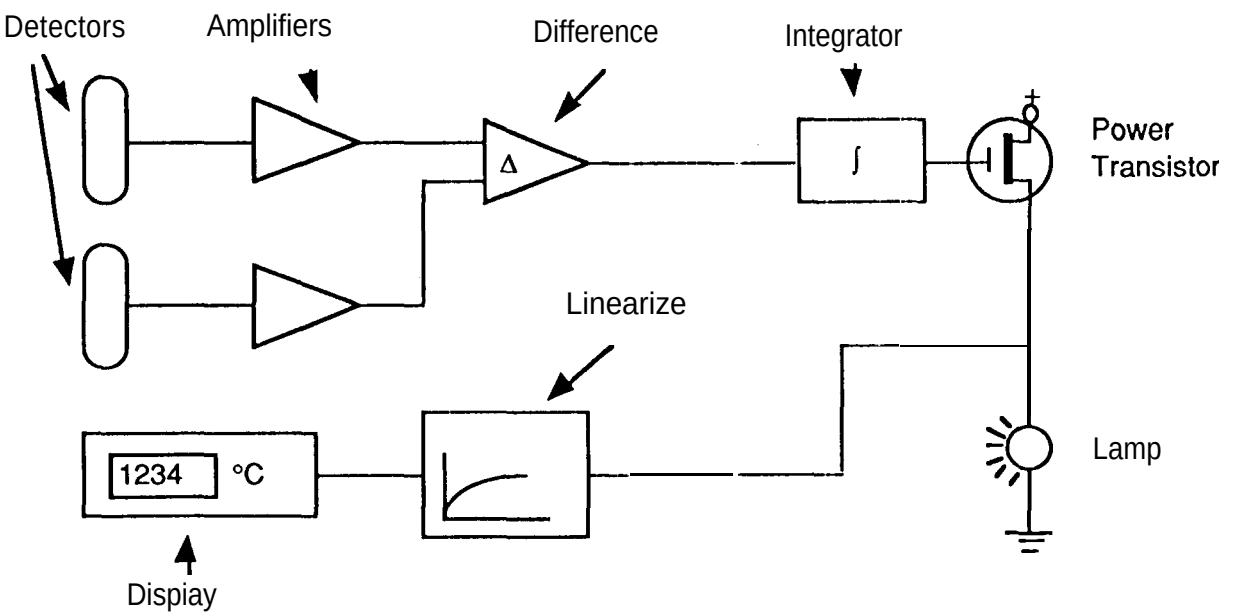

Figure 3: Block Diagram for Simple. Polaradiometer

The output from the difference generator chip is connected to an integrator which in turn controls the intensity of the lamp via a power transistor. If the output of the difference generator is zero the output of the integrator and thus the intensity of the lamp remain constant. As soon as the polarization state is out of balance the integrator will adjust the lamp intensity back to a situation where the polarization state is in balance.. The intensity of the lamp is

represented by the electrical current through it. The value of this current is converted to a temperature reading through a linearize and then displayed.

RESULTS

The prototype built at JPL successfully demonstrated the feasibility of the Polaradiometer. Two sets of electronics were built for this device. The first set included an automatic logic selection circuit, which would switch its logic after an attempt to null the polarization state of the incoming light would fail for more than 1 second. This was deemed necessary since it is unknown if increasing the intensity of the reflected portion of the light will increase or decrease the polarization. This circuit however created some problems due to crosstalk between the two detection channels and the internal clock. In order to at least demonstrate the feasibility of this type of instrument a new much simpler set of electronics was designed and built, which essentially only included two high gain low noise amplifiers with adjustable zero position and gain. The amplifier zeroes and gains were adjusted by supplying an unpolarized beam of light and ensuring that with the light input off both channels read zero and with the source on both channels output was exactl y equal.

Next a heated platinum strip sample was installed such that the axis of the PSD was at 45° to the surface of the strip. Figure 4 is a plot of the two output voltages versus sample. temperature and Figure 5 shows the halogen light input power (voltage times current) to cause the two detector voltages to become equal.

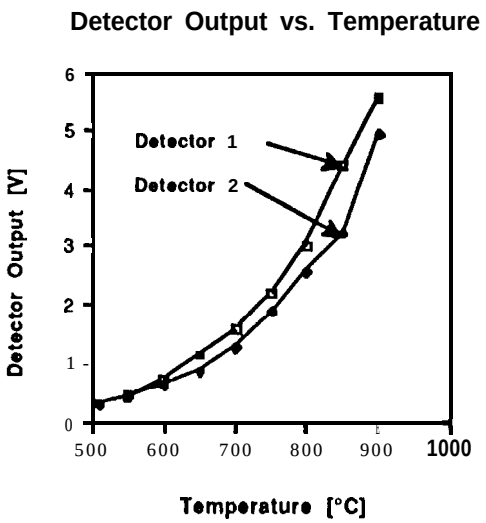

Figure 4: Detector Output (Light Intensity) vs. Temperature for the two Directions of Polarization

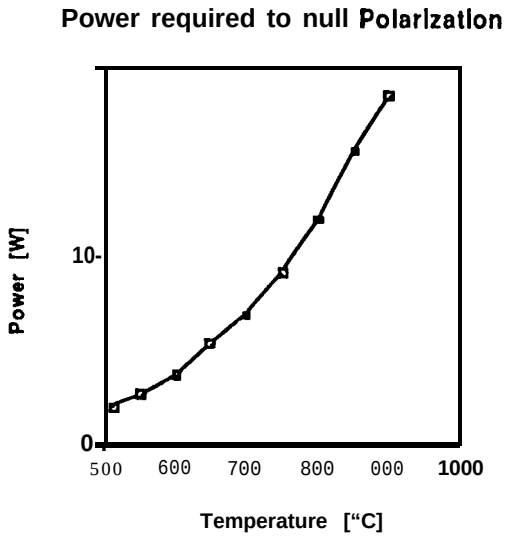

Figure 5: Power required to Null Polarization of Incoming Light

The data presented in Figure 4 and 5 arc repeatable to within 5% with the current electronics but could be significantly improved if more elaborate and precise amplification schemes are employed. A converter from light power to temperature is not included in this effort due to the fact that the ATD is not completed at this time.

CONCLUSIONS

We have demonstrated the viability of a new polaradiometric method for measuring the true temperature of a heated material. The Polaradiometer can determine the temperature without requiring a knowledge of the sample emissivity Measurements of the temperature of samples with varying surface characteristics ranging from specular to diffuse. The next step in the development of this system would be to design and build a converter circuit to directly convert the light source power input to a temperature reading. The Polaradiometer also has the potential of making accurate true temperature measurements without cumbersome computational requirements. The cost of a commercially built

polaradiometer could therefore be kept far below any currently available technology for true temperature measurements.

ACKNOWLEDGMENT

We thank Dr. A. Biswas for suggesting several improvements to the Polaradiometer design. The research described in this article was carried out at the Jet Propulsion Laboratory, California Institute of Technology, under contract with the National Aeronautics and Space Administration.

REFERENCES

Hale, R., Editor, "proceedings of the Second Noncontact Temperature. Measurement Workshop," Jet Propulsion Laboratory, Pasadena, CA, January 1989.

Lee, M., Editor, "Noncontact Temperature Measurement," NASA Conference Publication 2503, Washington, DC, April 1987.

Murray, T. (1967) "Polaradiometer - A New Instrument for Temperature Measurement," in Rev. Sci. Instr., 38(6), 791-798.